Armătură filet metric - DKOL

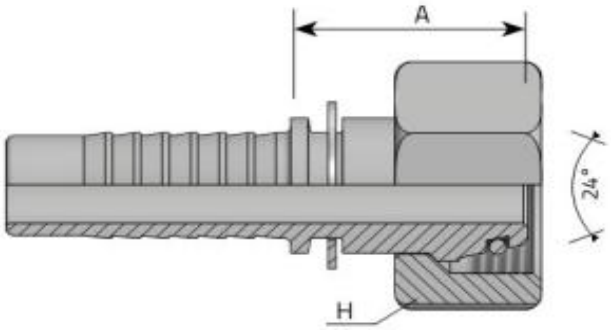

DIN 3865
con 24 de grade
serie uşoară

Cod	Inch	Diametru interior furtun	Filet	D	hex H	A	Preț EUR
DKOL 12*1.5/05	3/16"	**DN 05**	**12 x 1.5**	6	14	25.5	**2.83**
DKOL 12*1.5/06	1/4"	**DN 06**	**12 x 1.5**	6	17	25.5	**1.98**
DKOL 14*1.5/06	1/4"	**DN 06**	**14 x 1.5**	8	17	23.5	**1.50**
DKOL 16*1.5/06	1/4"	**DN 06**	**16 x 1.5**	10	19	26.0	**1.78**
DKOL 18*1.5/06	1/4"	**DN 06**	**18 x 1.5**	12	22	26.0	**2.83**
DKOL 14*1.5/08	5/16"	**DN 08**	**14 x 1.5**	8	19	21.5	**3.50**
DKOL 16*1.5/08	5/16"	**DN 08**	**16 x 1.5**	10	19	26.0	**1.78**
DKOL 18*1.5/08	5/16"	**DN 08**	**18 x 1.5**	12	22	26.0	**2.45**
DKOL 16*1.5/10	3/8"	**DN 10**	**16 x 1.5**	10	19	23.5	**3.00**
DKOL 18*1.5/10	3/8"	**DN 10**	**18 x 1.5**	12	22	26.5	**1.83**
DKOL 22*1.5/10	3/8"	**DN 10**	**22 x 1.5**	15	27	27.0	**3.15**
DKOL 18*1.5/12	1/2"	**DN 12**	**18 x 1.5**	12	22	25.5	**5.10**
DKOL 22*1.5/12	1/2"	**DN 12**	**22 x 1.5**	15	27	27.5	**2.93**
DKOL 26*1.5/12	1/2"	**DN 12**	**26 x 1.5**	18	32	28.0	**4.50**
DKOL 26*1.5/16	5/8"	**DN 16**	**26 x 1.5**	18	32	30.0	**4.33**
DKOL 27*1.5/16	5/8"	**DN 16**	**27 x 1.5**	-	-	-	**4.55**
DKOL 27*2/16	5/8"	**DN 16**	**27 x 2**	-	-	-	**4.55**
DKOL 30*2/16	5/8"	**DN 16**	**30 x 2**	22	36	31.0	**6.78**
DKOL 26*1.5/20	3/4"	**DN 20**	**26 x 1.5**	18	32	29.0	**6.98**
DKOL 30*1.5/20	3/4"	**DN 20**	**30 x 1.5**	-	-	-	**6.10**
DKOL 30*2/20	3/4"	**DN 20**	**30 x 2**	22	36	31.0	**5.20**
DKOL 33*2/20	3/4"	**DN 20**	**33 x 2**	-	-	-	**6.78**
DKOL 36*2/20	3/4"	**DN 20**	**36 x 2**	-	-	-	**11.83**
DKOL 36*2/25	1"	**DN 25**	**36 x 2**	28	41	33.5	**9.73**
DKOL 45*2/32	1.1/4"	**DN 32**	**45 x 2**	35	50	38.5	**16.20**
DKOL 52*2/40	1.1/2"	**DN 40**	**52 x 2**	42	60	39.0	**25.90**

Preţurile NU conţin TVA